# Episode 12 (Networking in a Virtual Environment)

The following figure shows the network environment of a virtual machine created by VMware. Virtual NICs are created on both the virtual server side and the Windows10 side, and can communicate with each other as an internal network.

If a Samba server is created on the CentOS7 side, the directories on the CentOS7 side can be operated from Windows10.

At the same time, since a virtual router is also created, FireFox (browser) on the CentOS7 side will be routed to access the Internet through the physical NIC connected to the PC. This virtual router can also be configured as a bridge.

Amazing! I can totally have two PCs and two routers and treat them as if they were connected. I can study as much networking as I want without incurring any costs, right?

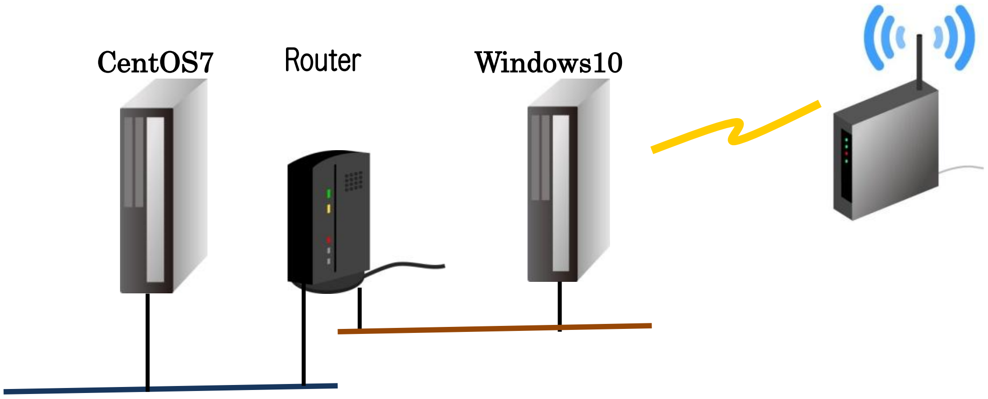

Kitsune, if we replace it with a physical machine, we can imagine it like this!

## Networking in a virtual environment

Relationship diagram between VMware, virtual server (CentOS7) and Windows 10 in a PC

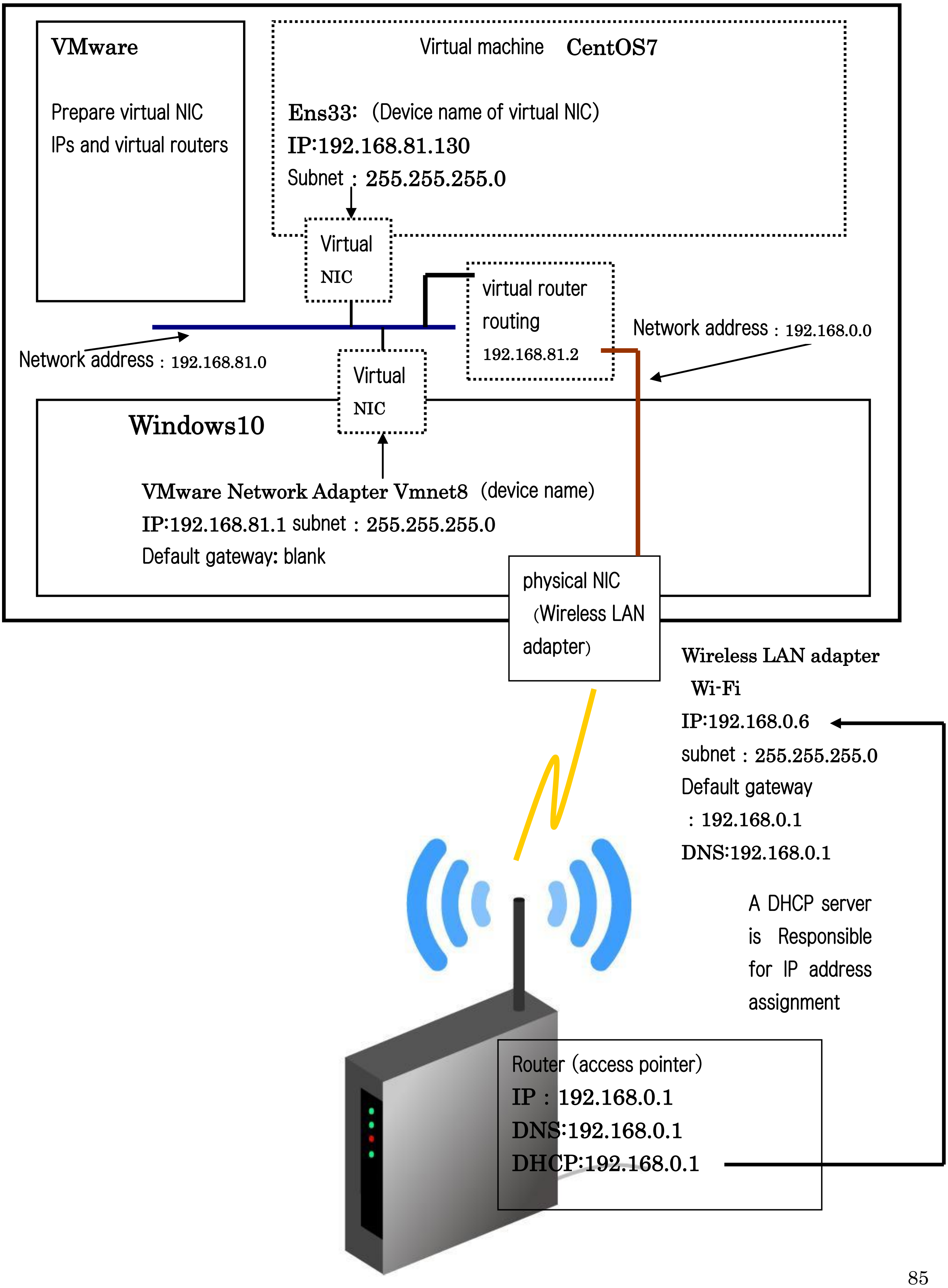
**VMware**
Prepare virtual NIC
IPs and virtual routers
Virtual machine **CentOS7**
**Ens33:** (Device name of virtual NIC)
**IP:192.168.81.130**
Subnet : **255.255.255.0**
Virtual
NIC
virtual router
routing
192.168.81.2
Network address : 192.168.81.0
Network address : 192.168.0.0
Virtual
NIC
**Windows10**
**VMware Network Adapter Vmnet8** (device name)
**IP:192.168.81.1** subnet : **255.255.255.0**
Default gateway: blank
physical NIC
(Wireless LAN
adapter)
**Wireless LAN adapter**
**Wi-Fi**
**IP:192.168.0.6**
subnet : **255.255.255.0**
Default gateway
: 192.168.0.1
**DNS:192.168.0.1**
A DHCP server
is Responsible
for IP address
assignment
Router (access pointer)
**IP : 192.168.0.1**
**DNS:192.168.0.1**
**DHCP:192.168.0.1**

Raccoon dogs, dude, that's awesome!
That's exactly how I imagine a raccoon dog to be described by a physical machine!

Now, let's see what we can do with episode 13.

Kitsune, I wish you could handle computer languages!

There are a lot of books out there explaining computer languages,
I could go on for hundreds of pages if I talk about the basics,
So let's focus on the C and Java languages!

Translated at DeepL